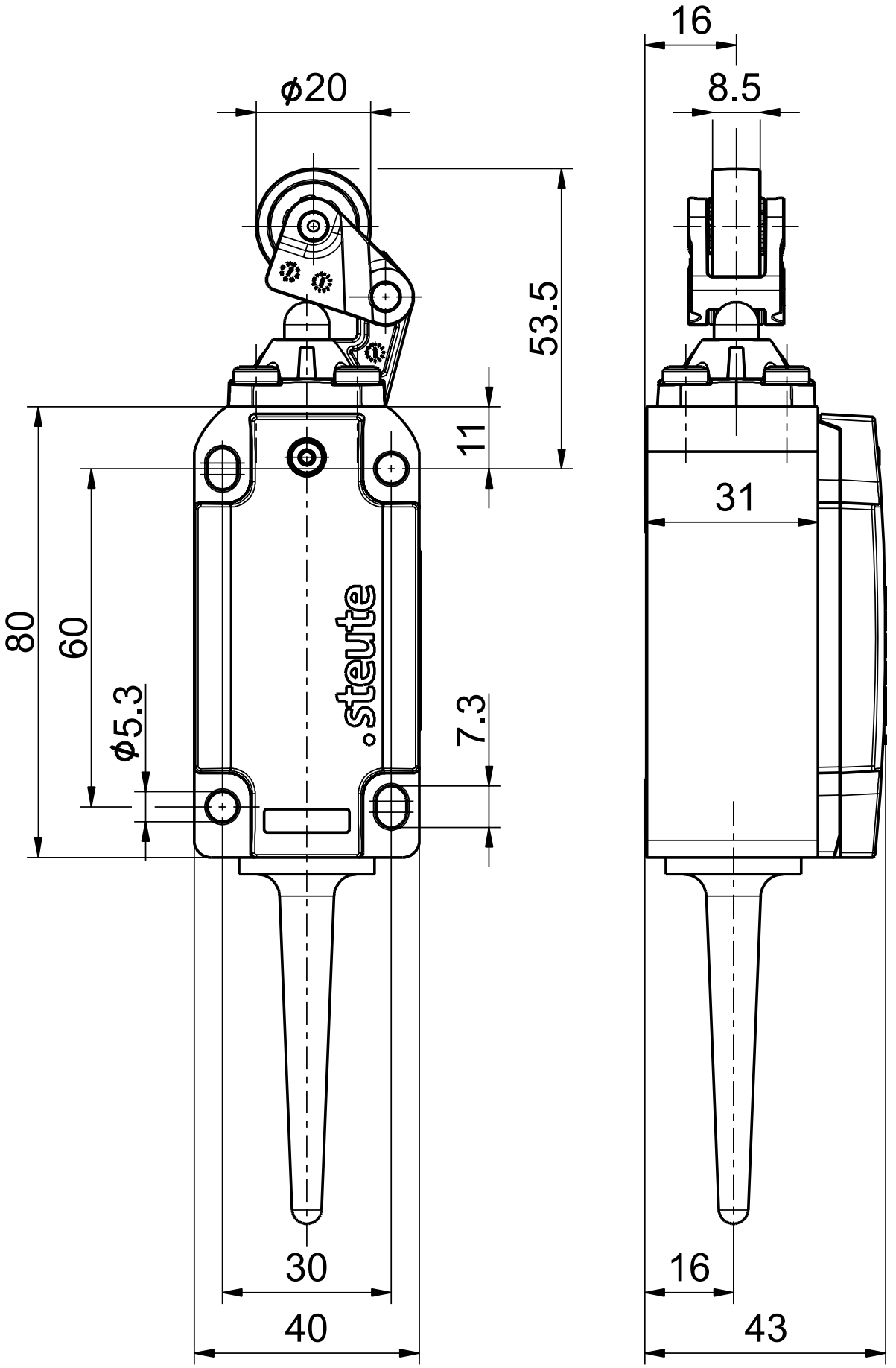
ϕ20
53.5
11
80
60
ϕ5.3
7.3
30
40
16
8.5
31
16
43
steute